ADD SYSTEM

Francesco Rota | 2016

ADD SYSTEM

Francesco Rota | 2016

To create a large collection, adding further elements is not enough. A concept is required that smoothly introduces each element. ADD SYSTEM follows this concept, combining ADD, ADD T and ADD S modular collections in a single furnishing philosophy. Consistent and versatile, the various elements complement each other, meeting all the needs of a modern office. With its variety of materials, colours and dimensions, ADD SYSTEM achieves an entirely Italian goal: to customise industrial production.

I_shape

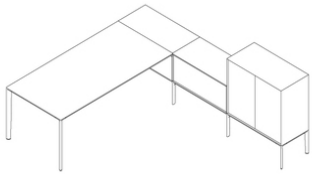

L_shape

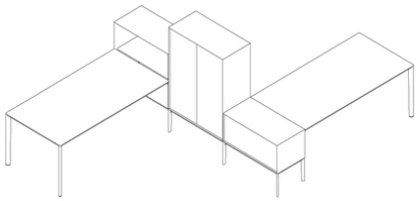

S_shape

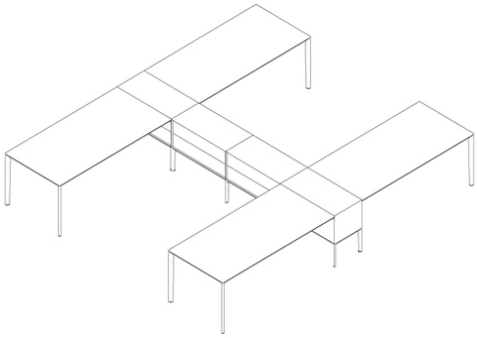

H_shape

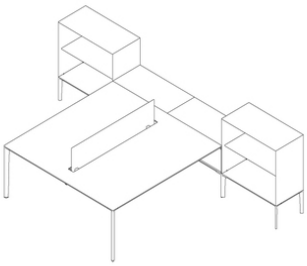

T_shape

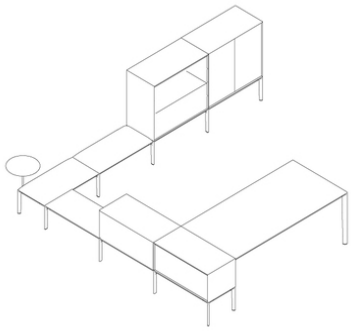

U_shape — executive

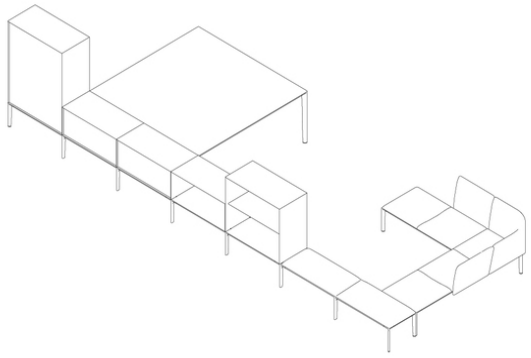

Meeting

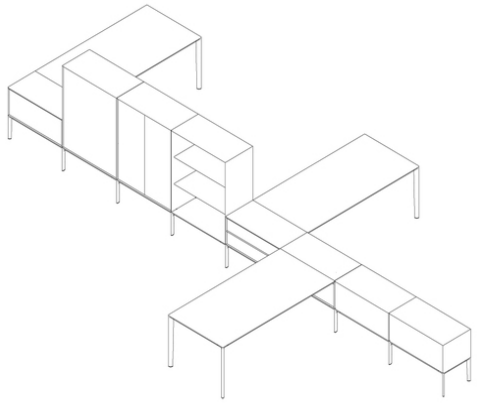

Asymmetrical workstation 1

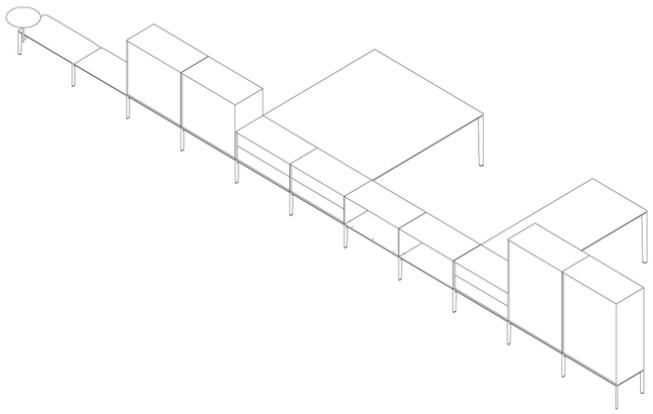

Asymmetrical workstation 2

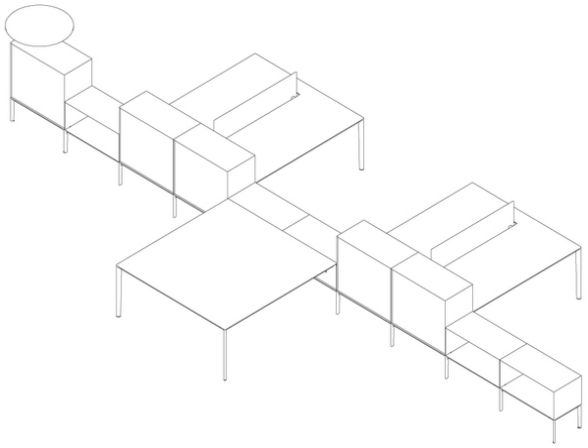

Asymmetrical workstation 3

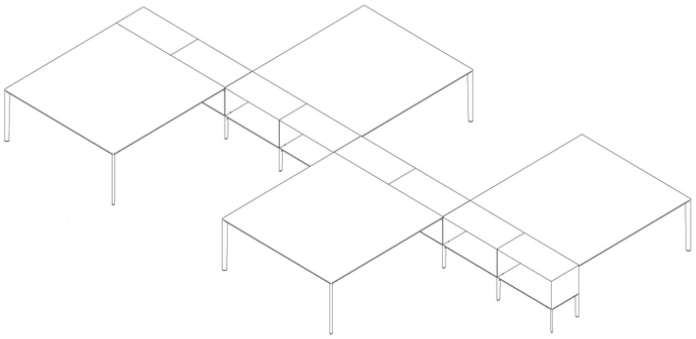

Symmetrical workstation — square

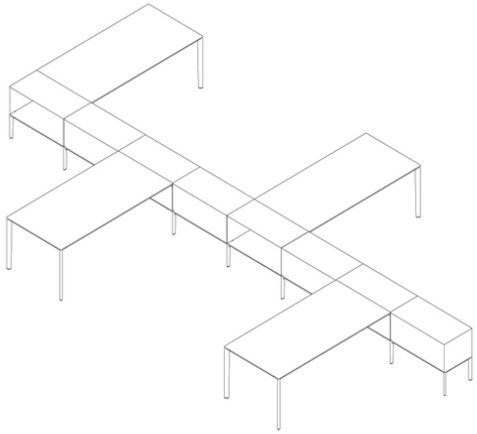

Symmetrical workstation — rectangular

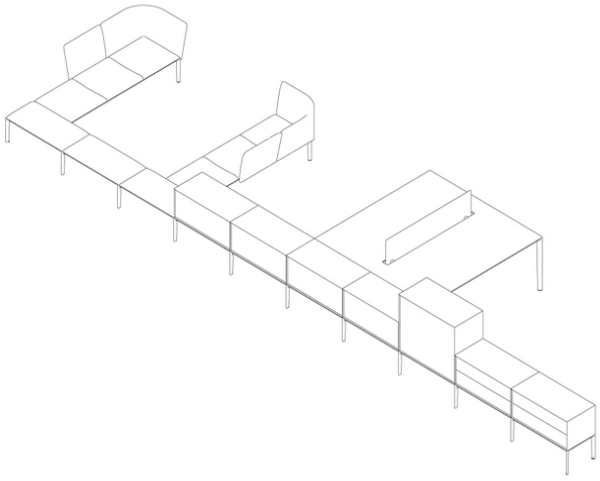

Complex office — small

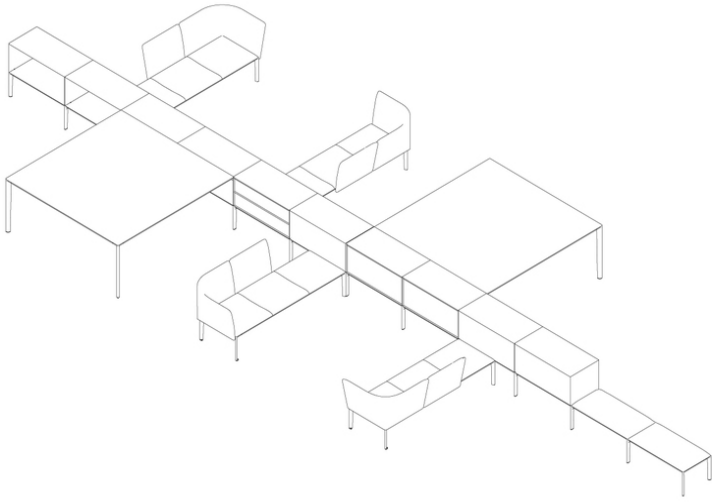

Complex office symmetrical — medium

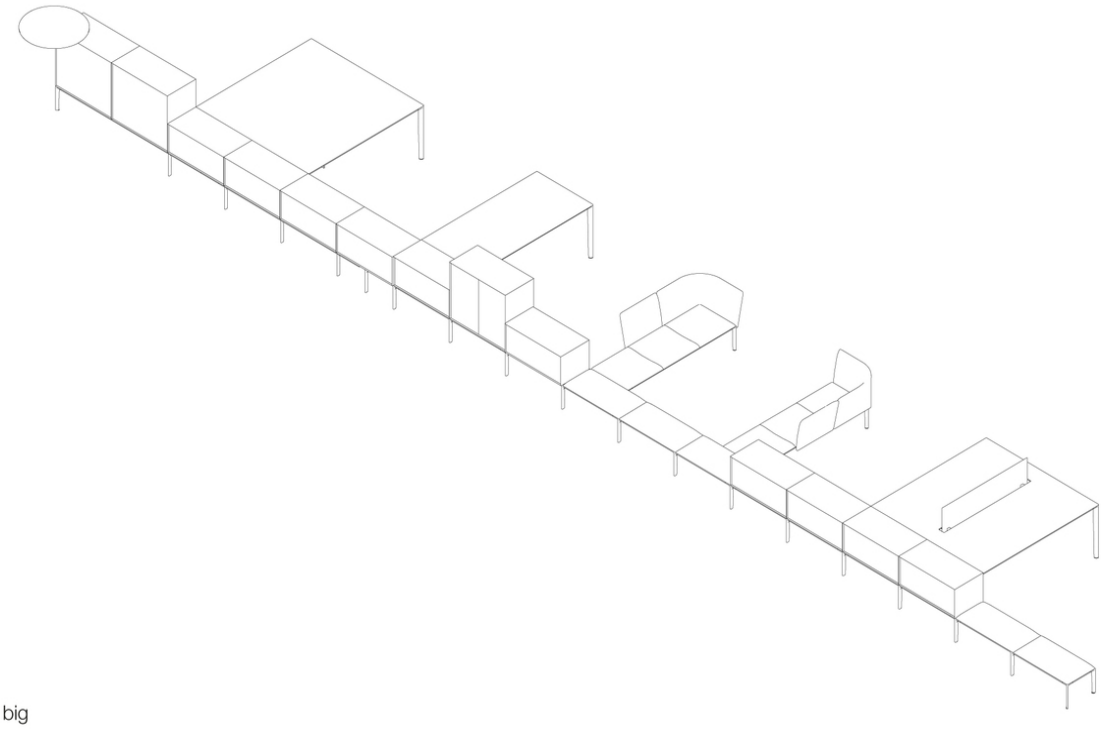

Complex office — big

ADD SYSTEM

Francesco Rota | 2016

Modular system of ADD T tables linked with ADD S storage units, which offer several furniture solutions for the office. Frame in aluminium with tops in HPL Fenix®, or in plywood blanched oak veneered or black open pore. Storage units in powder coated metal, with shelves, drawers, backs and doors in several finishes. ADD SYSTEM can be combined with the seating system ADD.

tops

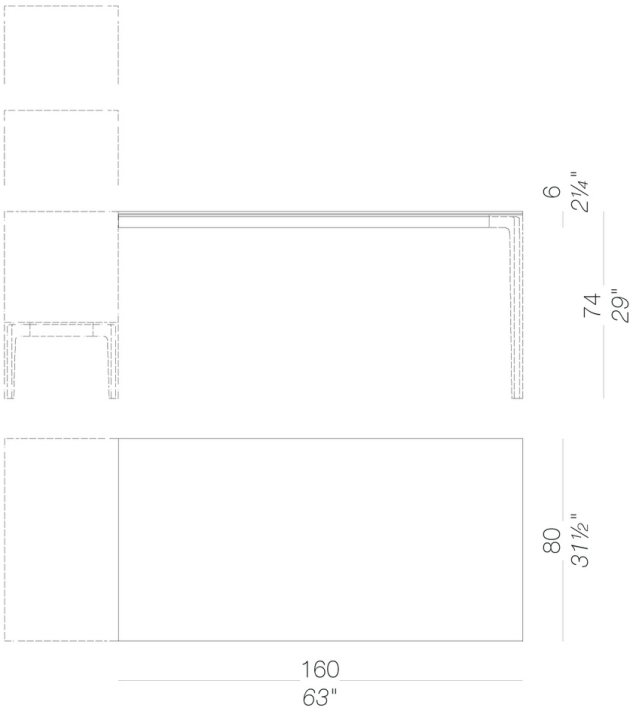

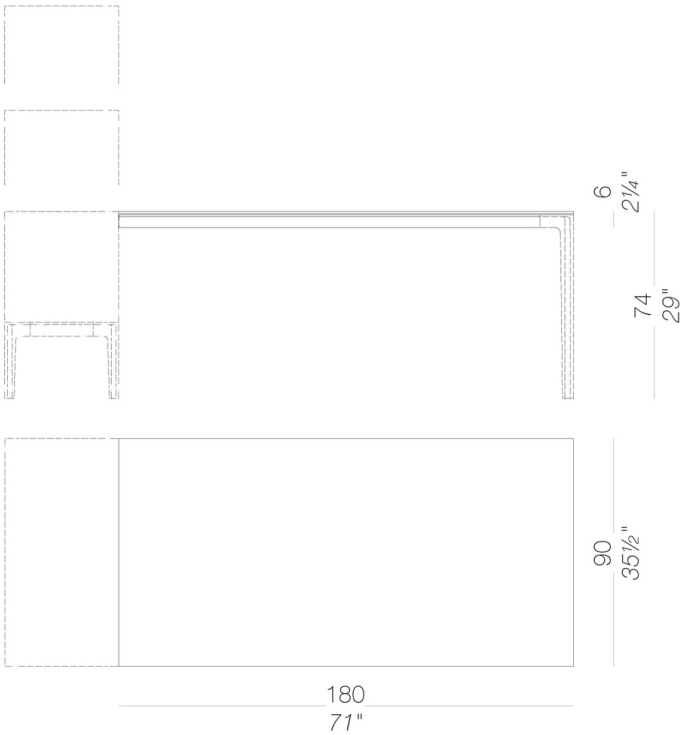

ADD SYSTEM

Francesco Rota | 2016

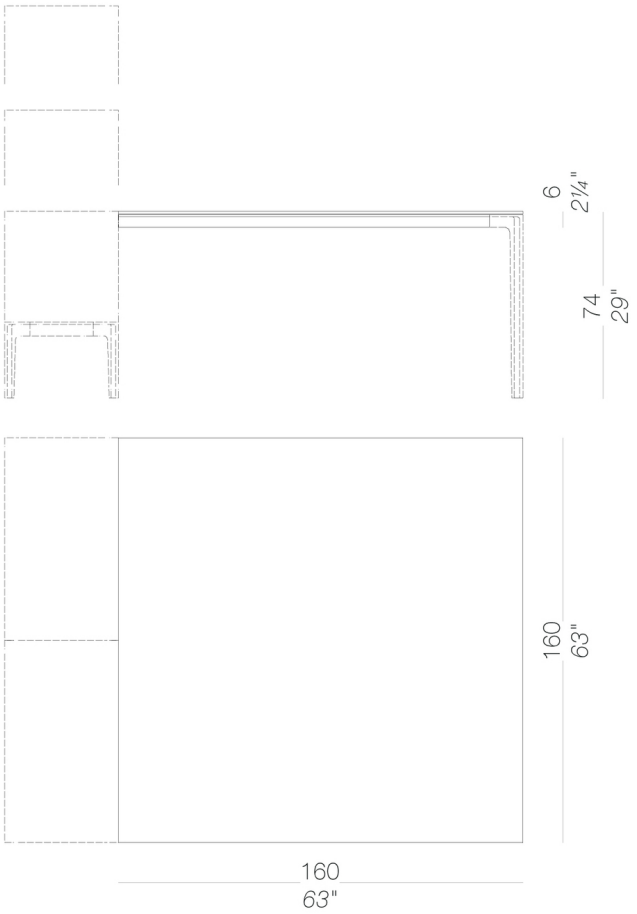

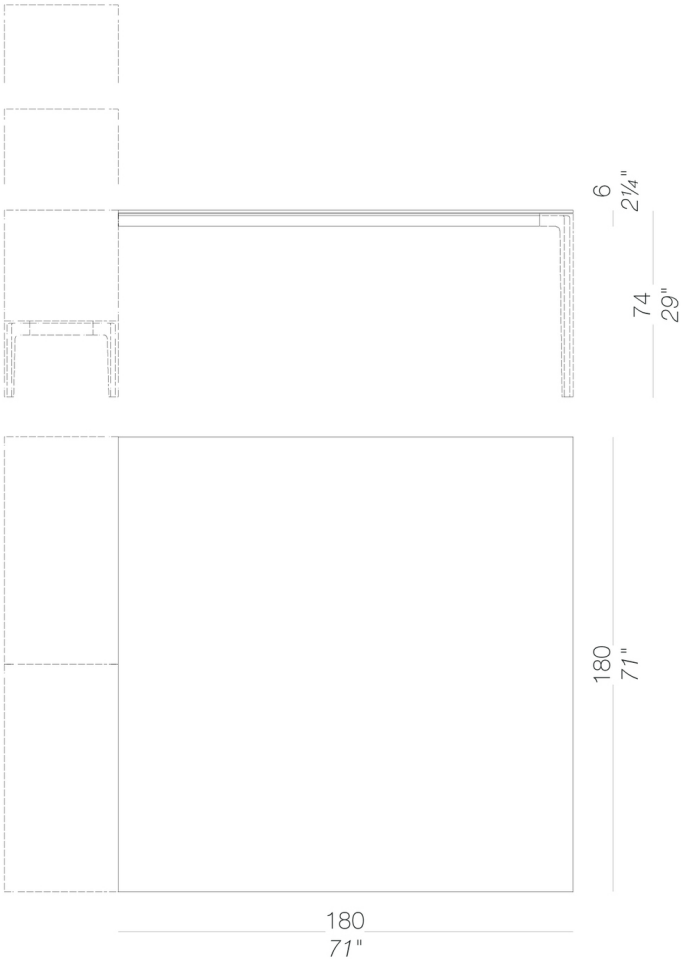

ADD SYSTEM

Francesco Rota | 2016

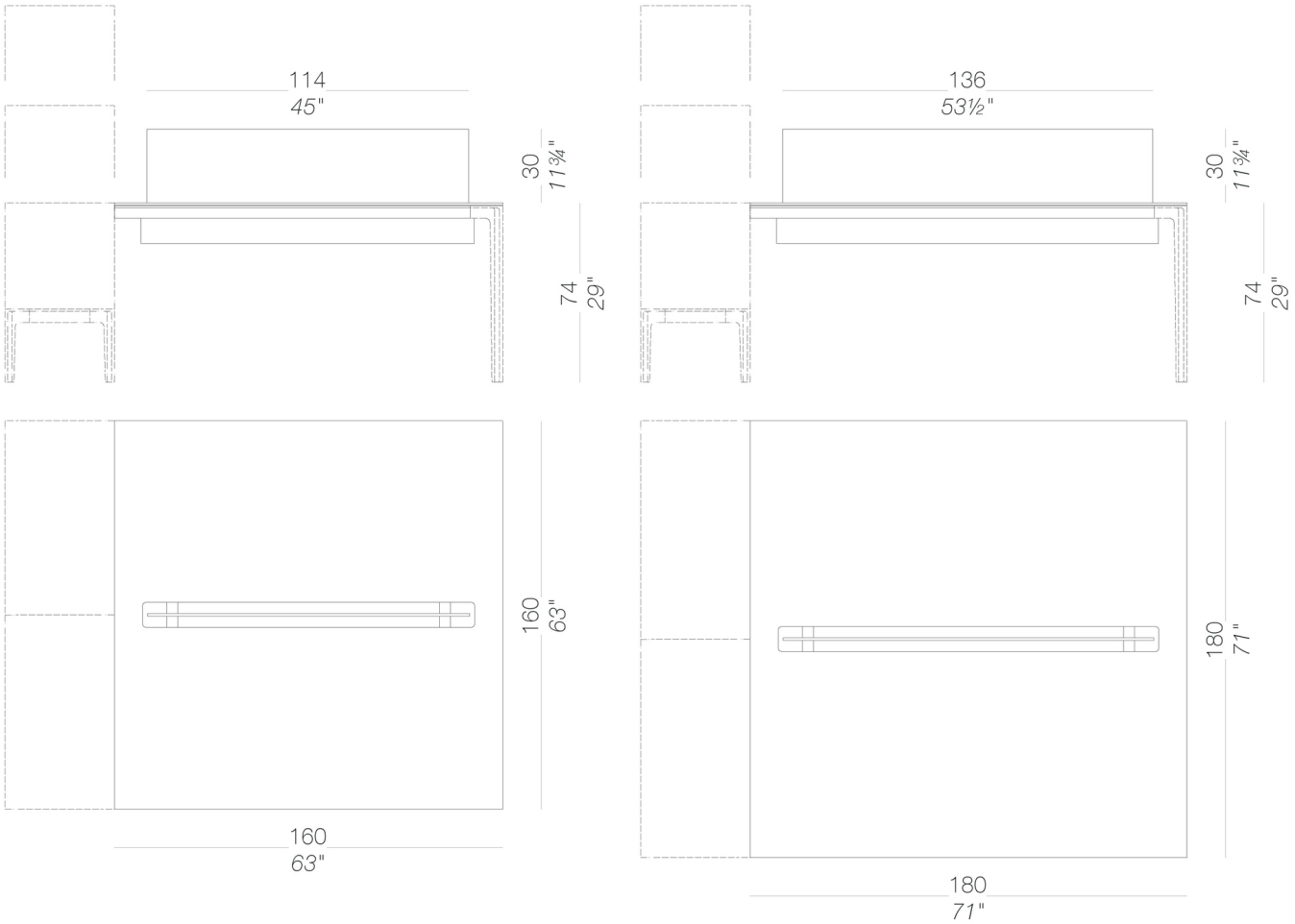

partition panel

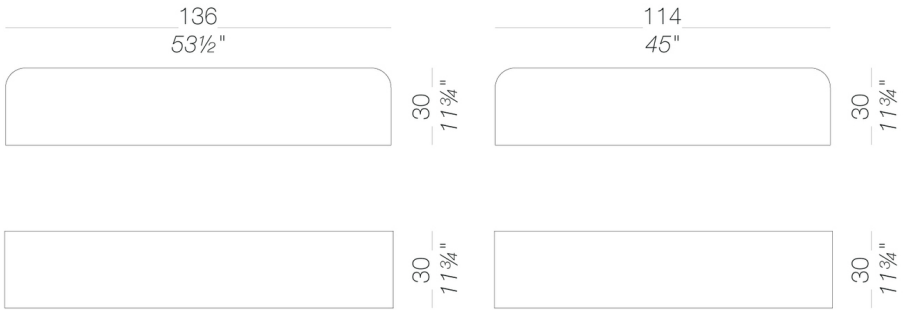

ADD SYSTEM

Francesco Rota | 2016

frame

powder coating black
1 Colors

powder coating white
1 Colors

top

HPL 10 mm black HPL fenix
1 Colors

HPL 10 mm white HPL fenix
1 Colors

HPL 10 mm HPL fenix grigio
Londra
1 Colors

HPL 10 mm HPL fenix rosso
Jaipur
1 Colors

wood blanched oak
1 Colors

wood black open pore
1 Colors

modesty panel

HPL 10 mm white HPL fenix
1 Colors

HPL 10 mm black HPL fenix
1 Colors

HPL 10 mm HPL fenix grigio
Londra
1 Colors

HPL 10 mm HPL fenix rosso
Jaipur
1 Colors

partition panel

HPL 10 mm white HPL fenix
1 Colors

HPL 10 mm black HPL fenix
1 Colors

HPL 10 mm HPL fenix grigio
Londra
1 Colors

HPL 10 mm HPL fenix rosso
Jaipur
1 Colors

wood blanched oak
1 Colors

wood black open pore
1 Colors

fabric Hallingdal 65 - Grade C
58 Colors

fabric Canvas 2 - Grade C
45 Colors

fabric Steelcut Trio 3 - Grade D
54 Colors

fabric Remix 3 - Grade C
72 Colors

fabric Fiord 2 - Grade C
39 Colors

fabric Divina MD - Grade D
27 Colors

fabric Divina Melange 3 - Grade D
38 Colors

fabric Tonica 2 - Grade C
39 Colors

fabric Medley - Grade A
37 Colors

fabric Jet - Grade A
66 Colors

fabric Maya - Grade A
43 Colors

fabric Capture - Grade B
60 Colors

fabric Crisp - Grade B
40 Colors

fabric Iris - Grade B
34 Colors

fabric Steelcut 3 - Grade D
40 Colors

fabric Grain - Grade. B
50 Colors

fabric Re-wool - Grade C
24 Colors

consult the porfolio for the range of colors, fabrics, eco-leather, soft-leather.

use and maintenance instructions
Clean all parts in wood, leather, fabric and metal with a damp cloth or a diluted neutral cleaner. Do not use cleaners with alcohol, bleach, solvent or abrasive products. Any liquid spilt on the product must be wiped up immediately.When lifting or moving the product, hold it on the structure and not under the seat. The product should not be subjected to unbalanced weights, as it is designed for a proper rest on the foothold (on four legs or on the base). Our company relieves from any responsibility in case of damage caused to fragile floors. Avoid any improper use of the product: do not step on the product, on the footrest or on the armrests. Avoid any movements that could compromise the proper functionality of the product or the safety of the users.Wood and

leather, being natural materials, could be easily damaged. Small impurities or imperfections are within quality standard range.Do not expose the product to weather conditions or atmospheric agents, nor to heat sources over 40°C. Also products for outdoor use could be afflicted by atmospheric agents. The product could undergo possible exterior changes due to particular exposure to heat, humidity and saltiness. An appropriate and frequent maintenance and cleaning of the product enhances its durability. The product could change colour and shade, if exposed to direct sunlight. Maintenance has to be carried out by experienced staff. Dispose of the package only after assembling the product, in order to avoid the loss of ironmongery and components. Once the product has been dismantled, the product itself or its components must be given to the public garbage disposal system, according to the legislation in force.