ADD

Francesco Rota | 2014

ADD

Francesco Rota | 2014

Three letters and creativity takes shape. It arranges, detaches, changes and has fun. Introducing the ADD seating system, which elegantly meets the needs of contemporary work environments and space sharing. It is also an international award-winning success. Comfortable and versatile, the basic seating represents the first syllable of a language that speaks to different worlds. Two furniture elements can create a sofa. In a line, internal and external backrests join and separate tiny communities, with small tables and accessories for tablets and notebooks included in the composition. Countless combinations, a circle that encompasses the extremities of a meeting.

One seater

Two seater

Three seater

Classic mini

Classic mini — double

Side by side

Vis-à-vis — small

Vis-à-vis — big

Classic

Stool

Bench

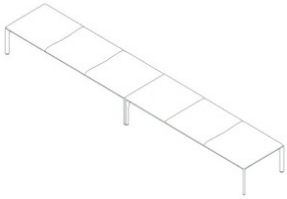

Long bench

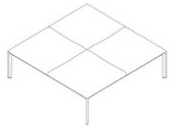

Square bench

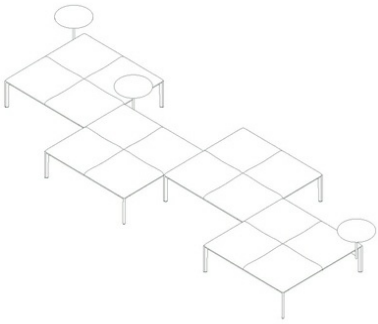

Square bench system

Lounge

Lounge — double

Sofa

L_shape

C_shape

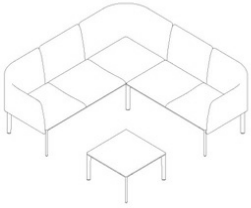

L_shape — big

L_shape — open

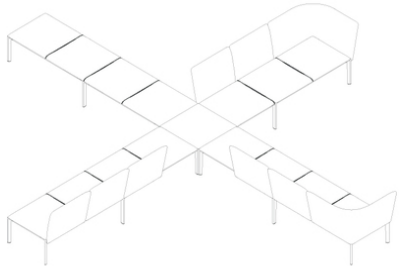

X_shape

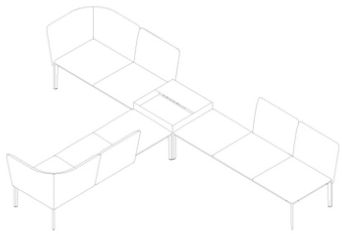

T_shape

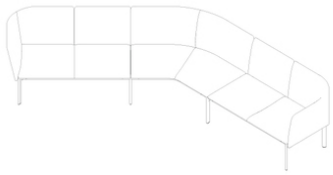

V_shape in

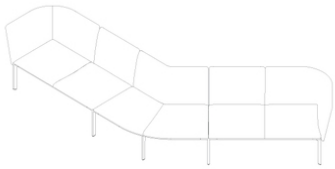

V_shape out

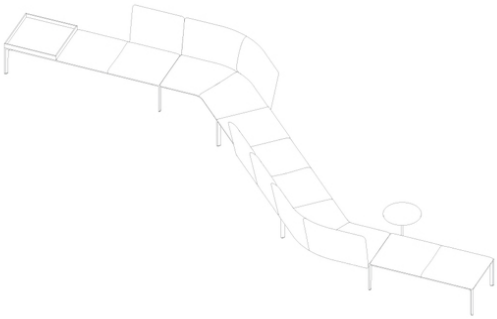

S_shape

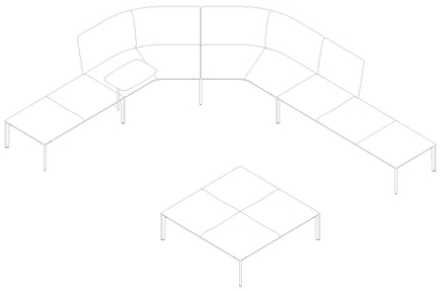

Big lounge

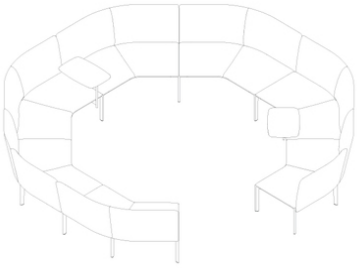

Round in

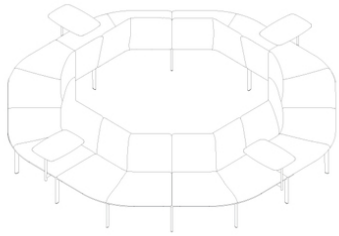

Round out

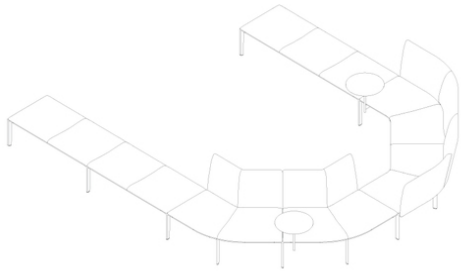

U_shape

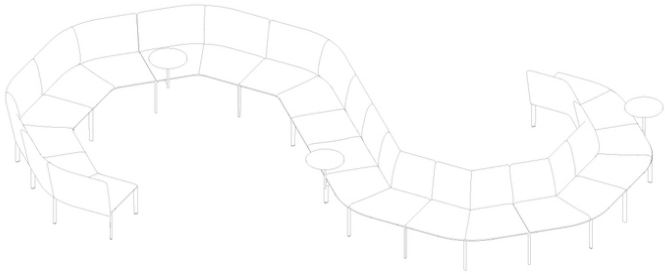

S_shape — big

One

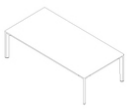

Two

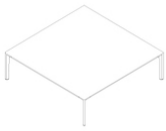

Four

ADD

Francesco Rota | 2014

Modular seating system with powder coated aluminium frame with webbed elastic support. Two types of recycled die-cast aluminium legs, one for corners and another to connect frames for larger configurations. Each leg type is available in two heights. Backrests and accessories can be fixed to the frame in several positions by using existing holes. Cushions and backrests in moulded polyurethane foam with polyester fiber, all fire-retardant, upholstered with removable fabric, soft leather or eco-leather. ADD is complemented by several accessories in HPL Fenix® 10 mm.: tops, trays, magazine racks, box for sockets. All metal parts are powder coated.

TEST EN 1728:2012 AC:2013 6.17 - EN 16139:2013 - L2 extreme
TEST 1 IM - Divina, Remix, Steelcut, Valencia

legs

seat frames

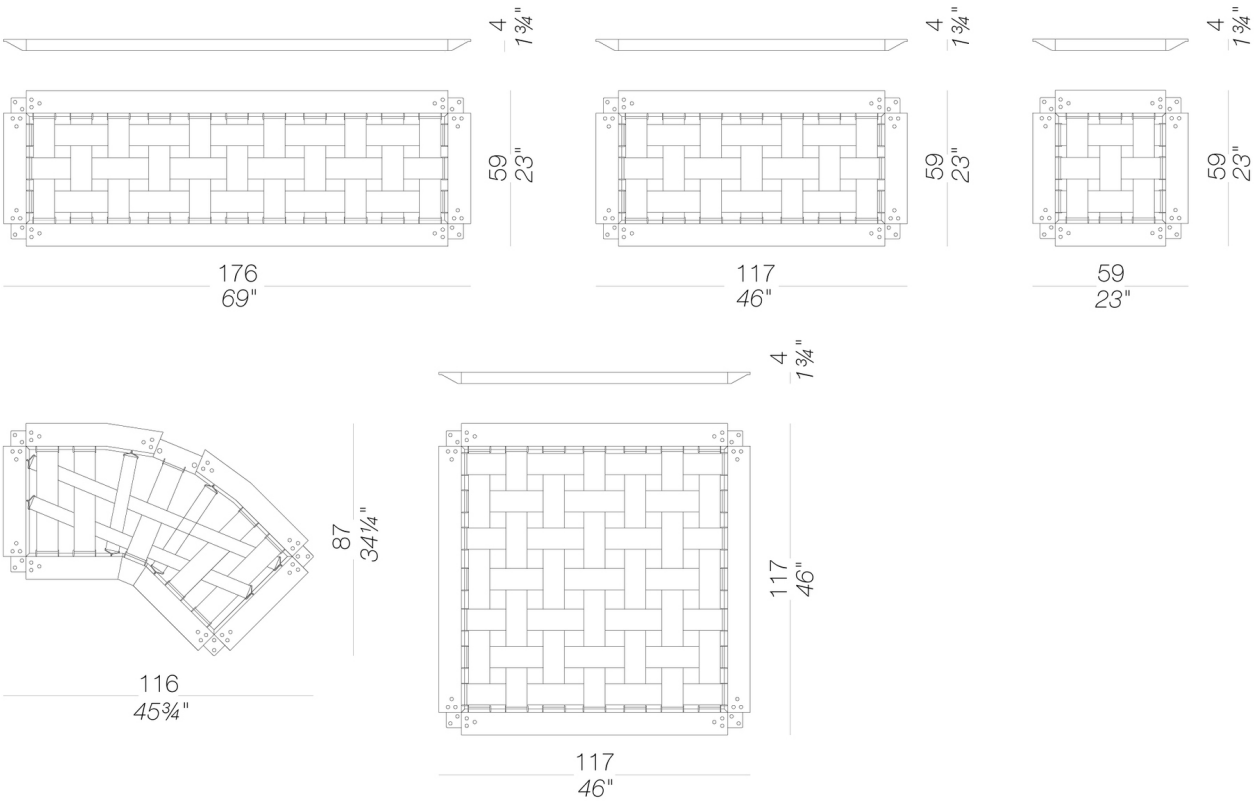

ADD

Francesco Rota | 2014

cushions

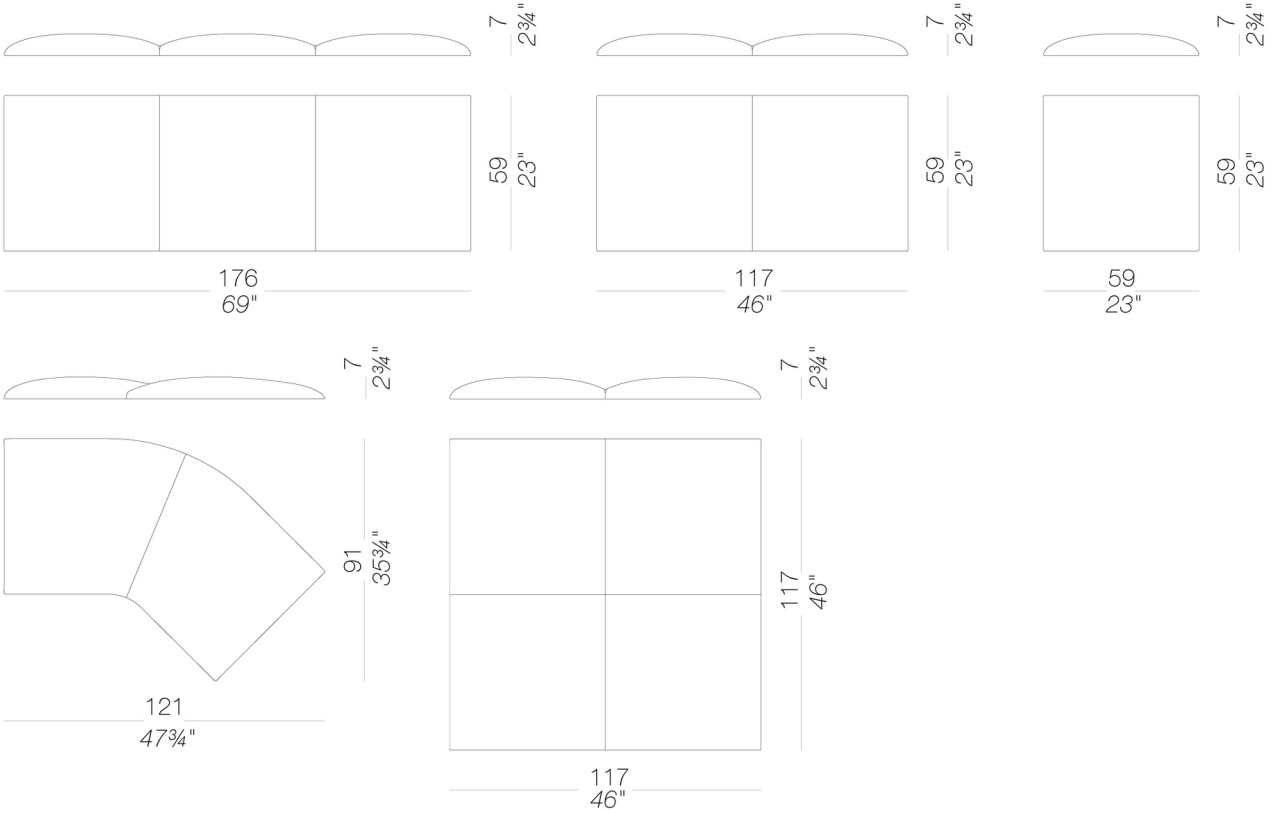

backs

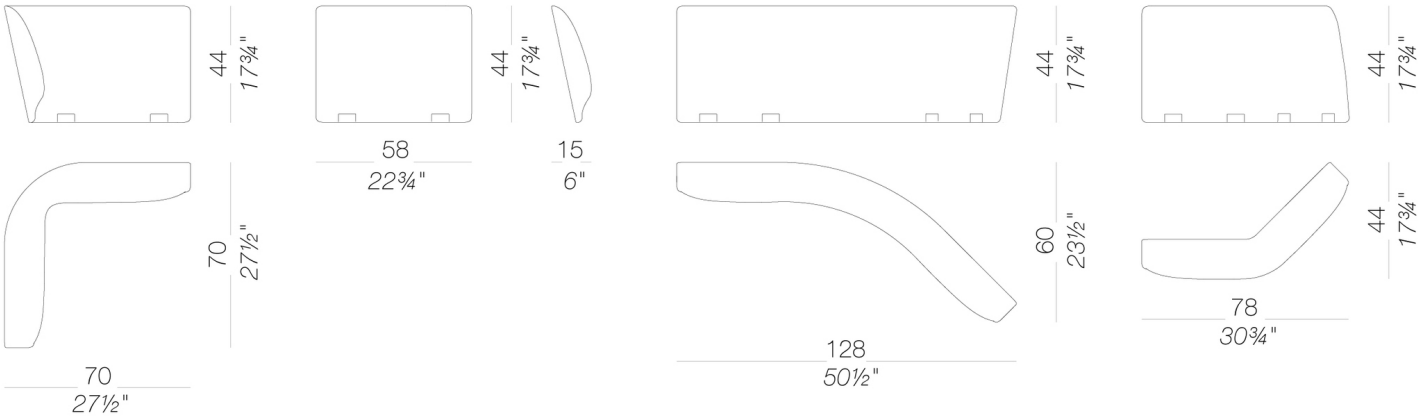

low table

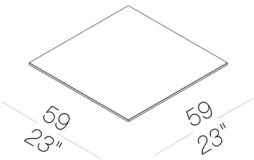

ADD

Francesco Rota | 2014

accessories

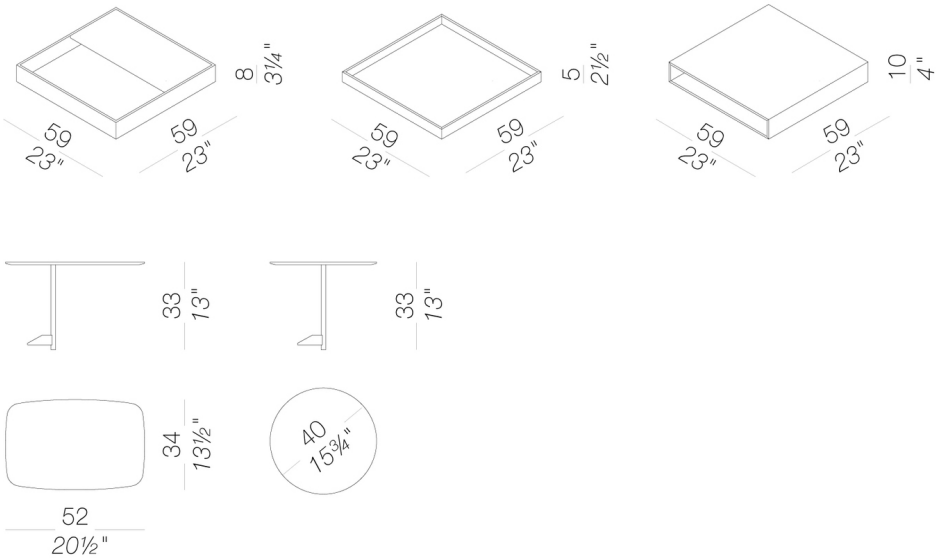

table frames

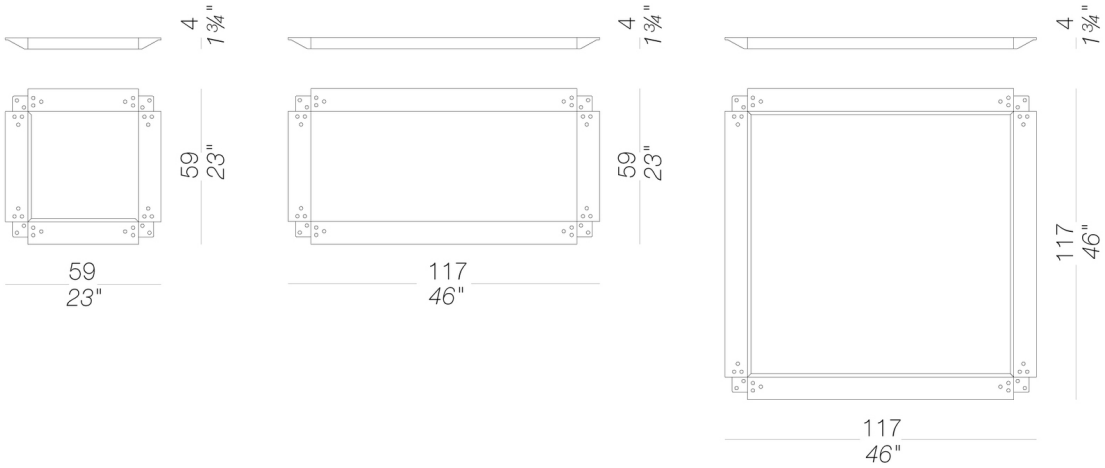

table tops

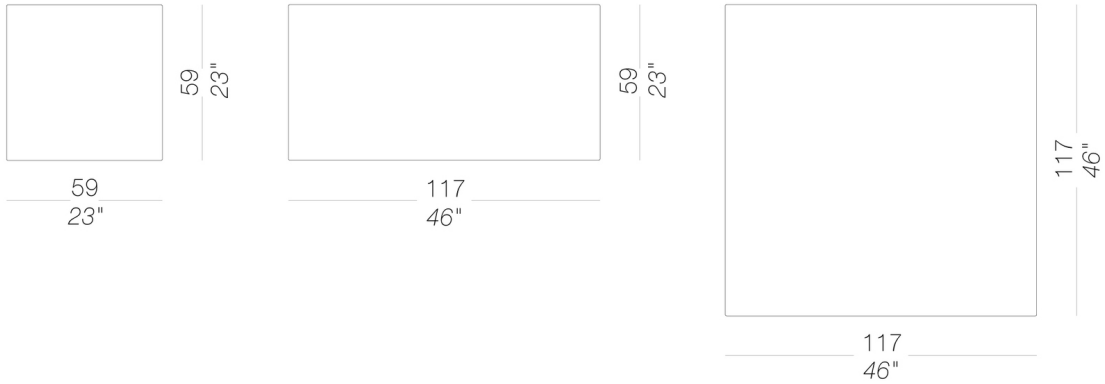

ADD

Francesco Rota | 2014

upholstery

fabric
Main Line Flax - Grade. B
57 Colors

fabric
Blazer - Grade. C
77 Colors

fabric
Chili - Grade. A
47 Colors

fabric
Umber - Grade. B
36 Colors

fabric
Nobel - Grade. C
30 Colors

fabric
Naveli - Grade. C
24 Colors

fabric
Fiocco - Grade. B
34 Colors

fabric
Atrium - Grade. C
16 Colors

fabric
Panama - Grade. A
48 Colors

fabric
Sorrento - Grade. B
22 Colors

fabric
Hallingdal 65 - Grade C
58 Colors

fabric
Canvas 2 - Grade C
45 Colors

fabric
Steelcut Trio 3 - Grade D
54 Colors

fabric
Remix 3 - Grade C
72 Colors

fabric
Divina MD - Grade D
27 Colors

fabric
Divina Melange 3 - Grade D
38 Colors

fabric
Medley - Grade A
37 Colors

fabric
Maya - Grade A
43 Colors

fabric
Jet - Grade A
66 Colors

fabric
Fiord 2 - Grade C
39 Colors

fabric
Tonica 2 - Grade C
39 Colors

fabric
Capture - Grade B
60 Colors

fabric
Crisp - Grade B
40 Colors

fabric
Iris - Grade B
34 Colors

fabric
Steelcut 3 - Grade D
40 Colors

soft-leather
Soft-leather
17 Colors

ecoleather
Valencia - Grade B
72 Colors

fabric
Grain - Grade. B
50 Colors

fabric
Re-wool - Grade C
24 Colors

frame

powder coating
black
1 Colors

powder coating
white
1 Colors

top

wood
blanched oak
1 Colors

wood
black open pore
1 Colors

HPL 10 mm
HPL fenix
2 Colors

accessories

HPL 10 mm
HPL fenix
2 Colors

consult the porfolio for the range of colors, fabrics, eco-leather, soft-leather.

use and maintenance instructions
Clean all parts in wood, leather, fabric and metal with a damp cloth or a diluted neutral cleaner. Do not use cleaners with alcohol, bleach, solvent or abrasive products. Any liquid spilt on the product must be wiped up immediately.When lifting or moving the product, hold it on the structure and not under the seat. The product should not be subjected to unbalanced weights, as it is

designed for a proper rest on the foothold (on four legs or on the base). Our company relieves from any responsibility in case of damage caused to fragile floors. Avoid any improper use of the product: do not step on the product, on the footrest or on the armrests. Avoid any movements that could compromise the proper functionality of the product or the safety of the users.Wood and leather, being natural materials, could be easily damaged. Small impurities or imperfections are within quality standard range.Do not expose the product to weather conditions or atmospheric agents, nor to heat sources over 40°C. Also products for outdoor use could be afflicted by atmospheric agents. The product could undergo possible exterior changes due to particular exposure to heat, humidity and saltiness. An appropriate and frequent maintenance and cleaning of the product enhances its durability. The product could change colour and shade, if exposed to direct sunlight. Maintenance has to be carried out by experienced staff. Dispose of the package only after assembling the product, in order to avoid the loss of ironmongery and components. Once the product has been dismantled, the product itself or its components must be given to the public garbage disposal system, according to the legislation in force.