ARKETIPO / INDOOR

SOFA BODYGUARD ZEN

STRUCTURE: Metal
ARM AND BACK UPHOLSTERY: multi-density expanded polyurethane (T40+CD18SS+T30N) covered with resin lining 350gr and
wadding “Fibra Piuma 545gr.”
SEAT UPHOLSTERY: multi-density expanded polyurethane (T40+OS35scm+35EM+MindFoam SS) covered with wadding “Fibra Piuma
545gr.”
SPRINGING: elastic belts
SEAT HEIGHT: 44 cm (49 cm with feet h. 22 cm)
ARM HEIGHT: minimum 60 cm - maximum 75 cm (minimum 65 cm - maximum 80 cm with feet h. 22 cm)
FEET: micaceous brown varnished metal h.17 cm. On request feet can be supplied 5 cm higher, with an extra charge.

The version with split backrest, called ZEN, is available with extra charge only for the units indicated in the price list.

The arm and back mechanisms increase the total size by 13 cm in the widith and
15 cm in the depth.

By composition, the joining system between the units decreases the overall dimension by about 2 cm for each junction point. The dimension indicated in the price list do not consider the decrease.

In order to avoid any damages to the mechanism, please do not sit on arms and backs.

Corner unit

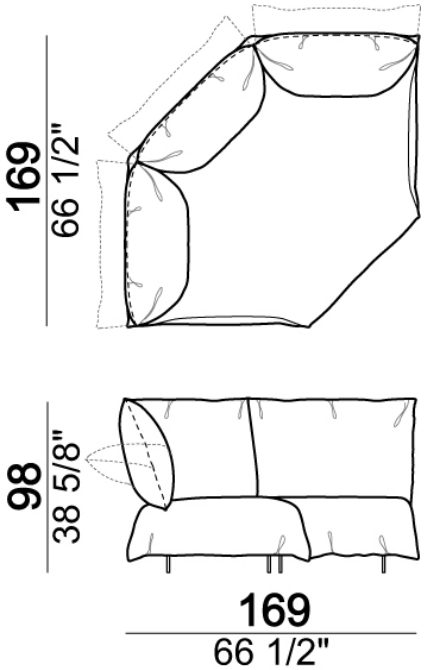

Composition D (left unit 107 cm + 2 central unit 169 cm with angle 45° + right unit 107 cm)

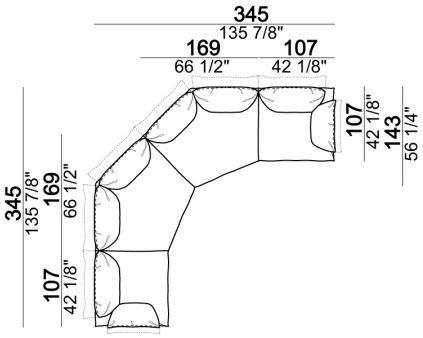

Right or left unit

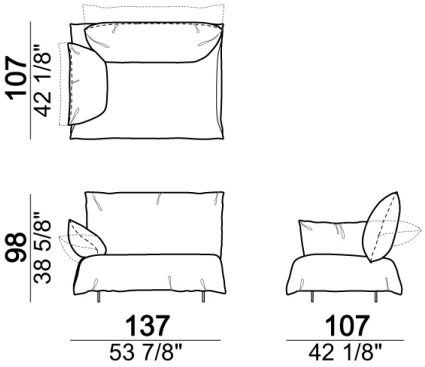

Composition A (left unit 107 cm + central unit 178 cm with angle 30° + right unit 107 cm)

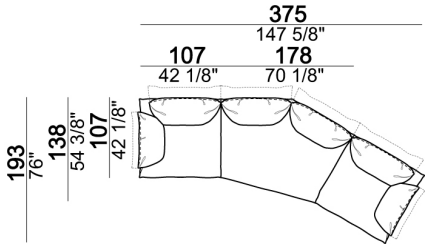

Dormeuse with right or left angle 30°. ATTENTION: THE UNIT IN THE DRAWING IS LEFT.

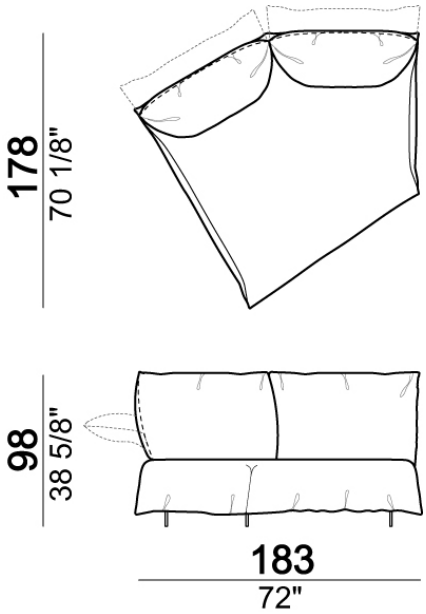

Sofa made by right unit 107 cm + left unit 107 cm

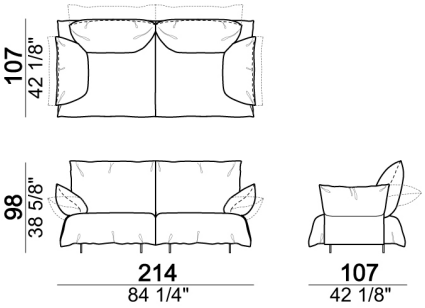

Composition C (left unit 107 cm + corner unit 169 cm + right unit 137 cm) NOTE: In this composition, the 137 cm element is the only one that cannot have the split back ZEN.

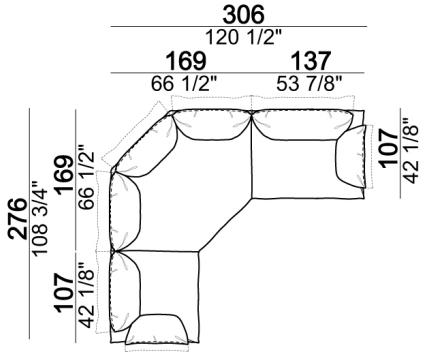

Central unit with angle 45°.

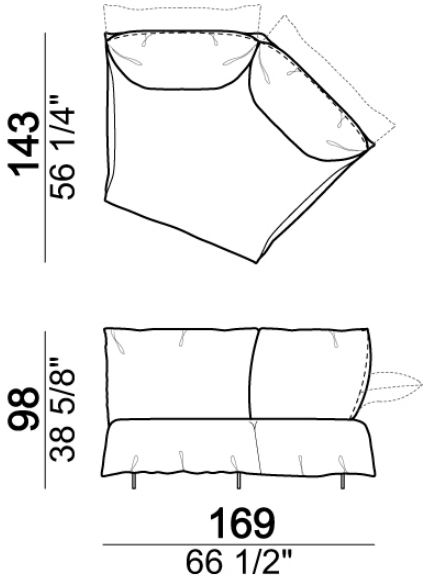

Right or left unit

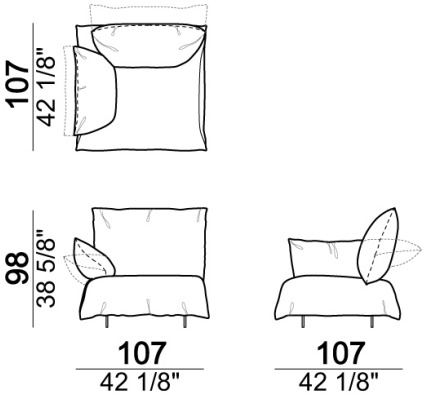

Sofa made by left unit 107 cm + central unit 97 cm + right unit 107 cm

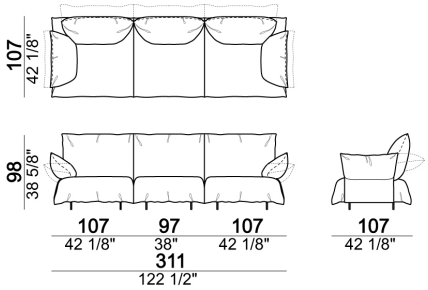

Composition G (left unit 107 cm + corner unit 169 cm + central unit 97 cm + right unit 107 cm)

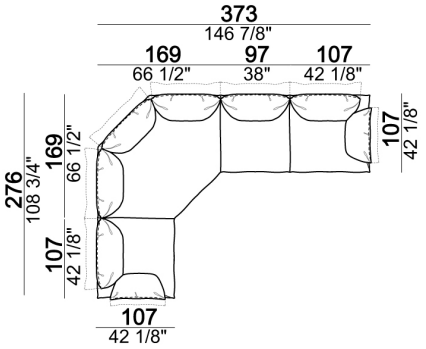

Composition F (central unit 169 cm with angle 45°. + central unit 97 cm + central unit 169 cm with angle 45°.)

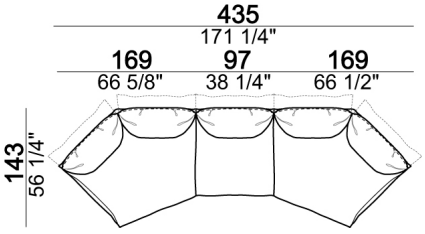

Central unit

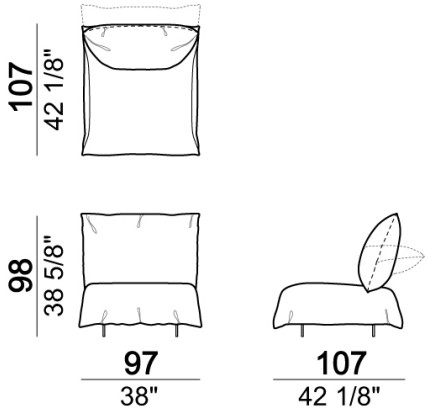

Central unit with angle 30°.

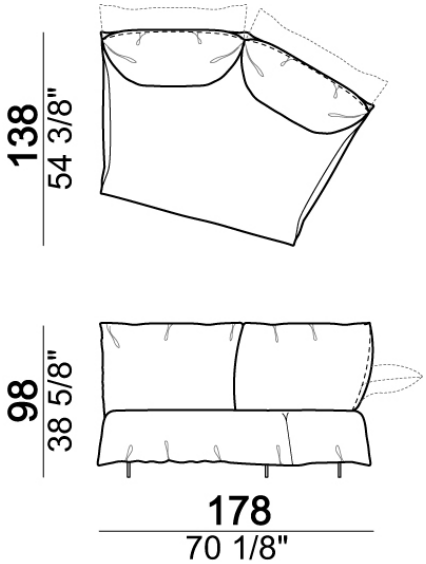

Central unit

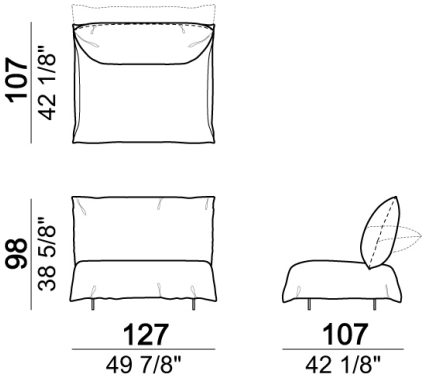

Composition E (dormeuse 183 cm with left angle 30°+ central unit 97 cm + right unit 107 cm)

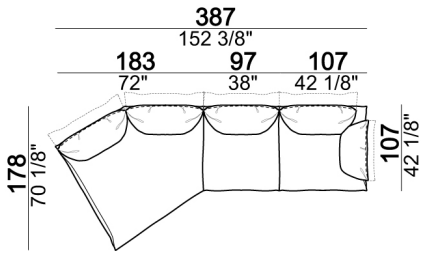
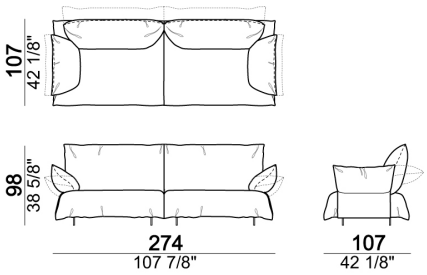
Sofa made by right unit 137 cm + left unit 137 cm